DAYTON

Dayton Water Reclamation Facility Downsizes Blowers to Upsize Energy Savings

One Water

Nick Dailey, P.E.
City of Dayton WRF Plant Engineer

DAYTON

One Water

Agenda

1. Background Info
   - *2011/2012 Dayton Led Investigation and Findings*
   - *Consultant Hiring and Technology Evaluation/Selection*
   - *Project Costs*
2. Provide Sulzer Blower Overview
3. Defendability
   - *Project Results*
   - *Where is the energy savings?*
   - *Outside Factors*
4. Lessons Learned and Future Plans
5. Construction Photos (if time remains)

DAYTON

One Water

Background Info

- Investigation of Nitrification Process (2011/2012)
  - Opportunities for Improvement
  - Potential additional improvements?
  - Final Improvement Direction
- Consultant Selection and Technology Evaluation
  - Multistage Centrifugal (Gardner Denver)
  - Oil Bearings (Siemens)
  - Air Bearing Blowers (APG-Neuros)
  - Magnetic Blowers (Sulzer-ABS)
- Project Costs

DAYTON

One Water

Investigation of Nitrification Process

Opportunities for Improvement

- Loading Demands Much Lower than Predictions/Design
  - 1988 Projected Flow 72 MGD versus 37 MGD in 2011
  - Projected concentrations of BOD 40-45 mg/l and Ammonia 26 mg/l
  - 2011 concentrations for BOD was the same but Ammonia was 16 mg/l
  - Impact is revealed in the loadings
    - 1988 Projected BOD 27k lbs versus 2011 Actual of 13k lbs
    - 1988 Project Ammonia 16k lbs versus 2011 Actual of 5.3k lbs
- Calculations of air requirements revealed 13,000 SCFM versus current 20,000 SCFM
  - Over aeration leading to biological shearing
  - Energy consumption much higher than necessary
- Additional Issues
  - Existing Blowers exceeded their useful life
  - Cannot meet existing air requirement due to turndown issues (20,000 SCFM and 8 psi)
  - Could not get in the existing blowers proprietary programming (i.e. “Black Box”)
  - New Software exists but expensive
  - Reliability of existing blowers was a concern

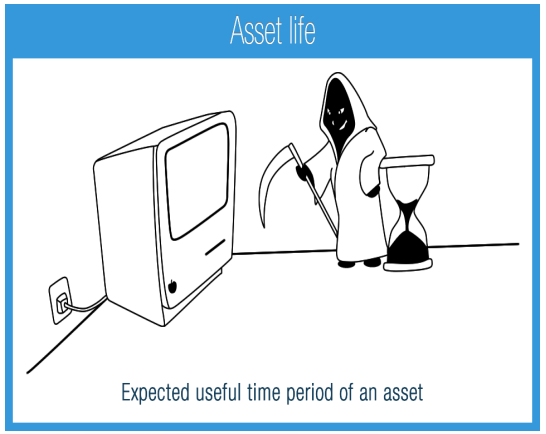

DAYTON

One Water

Investigation of Nitrification Process (Cont'd)

Potential additional Improvements?

1. Electrical System Oversized
   - Turblex Blowers 4160V versus new technology 480V
2. Energy Reduction through automation (i.e. tracking DO)
3. Occasional failures of air distribution system
4. Ceramic dome piping has occasional failures
5. Ceramic domes are old technology and manufacturer no longer in business
6. Process Air Compressor #1 not functional → Reliability concerns
7. Air distribution system not configured for new blower technology

One Water

DAYTON

Investigation of Nitrification Process (Cont'd)

Final Improvement to put out for Design Services

1. Electrical System Oversizing must be remedied
2. Automation and air flow in 4 of 8 aeration basins
3. Air distribution system reliable and minimal maintenance since 1988
4. Ceramic dome piping repairs were needed but entire system will not be replaced
5. 6,000 new Ceramic domes in stock and are nearly as efficient when in new condition
6. Two (2) Existing Blowers will be replaced with new blowers
7. Air distribution system will be reconfigured for new blower technology
8. Reduction in Energy Costs were estimated to be $370K/Year
   - Reduced air requirements of 20k SCFM versus 13k SCFM required
   - 300 kW reduction by switching to new blower technology (1500 hp versus 600hp)

One Water

DAYTON

Consultant Selection and Technology Evaluation

Hazen and Sawyer was selected as the Design Consultant

- Agreement approved in March of 2013
- Reviewed Dayton Investigation Results
- Confirm Basis of Design
- Evaluate Aeration System Options
  - High speed direct drive via air bearing and magnetic bearing
  - Turblex
  - Hybrid/multi-stage
- Evaluate blower(s) and DO control systems
- Evaluate diffusers and piping
- Evaluate electrical improvements

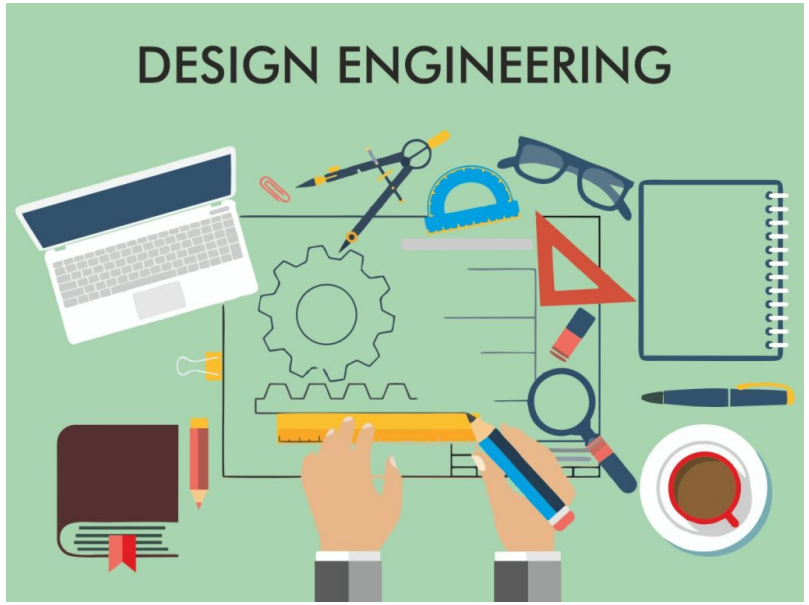

One Water

DAYTON

Consultant Selection and Technology Evaluation

Alternatives Evaluated

Alternative	Manufacturer	Design Capacity	Installed Capacity	Horsepower		
				Blower	Operating	Total
1	Sulzer-ABS	8,000 scfm	24,000 scfm	400	800	1,200
	APG-Neuros	8,000 scfm	24,000 scfm	400	800	1,200
	APG-Neuros	8,000 scfm	24,000 scfm	500	1,000	1,500
2	APG-Neuros	12,000 scfm	24,000 scfm	600	1,200	1,200
	Siemens	12,000 scfm	24,000 scfm	550	1,100	1,100
3	Sulzer-ABS (+ Multi-Stage Blower)	5,000 scfm (12,000 scfm)	22,000 scfm	268 (+ 600)	868	1,136
	APG-Neuros (+Multi-Stage Blower)	5,000 scfm (12,000 scfm)	22,000 scfm	250 (+ 600)	850	1,100

Savings of $200,000 per year on electrical

Alternative	Manufacturer	Minimum Capacity	Horsepower per Blower	Average Power Demand (KW)	Annual Electrical Demand (kW-hr/yr)
Existing	Siemens	20,000 scfm	1,500	949	8,313,000
1	Sulzer-ABS	14,000 scfm	400	418	3,665,000
	APG-Neuros		400	452	3,960,000
	APG-Neuros		500	471	4,126,000
2	APG-Neuros		600	458	4,009,000
	Siemens		550	477	4,181,000
3	Sulzer-ABS (+ Multi-Stage Blower)		268 (+ 600)	472	4,132,000
	APG-Neuros (+Multi-Stage Blower)		250 (+ 600)	476	4,168,000

Compared to 1500 HP

Alternative	Manufacturer	Capital Cost (Million $)	Total Present Worth Cost (Million $)	Total Annualized Cost
1	Sulzer-ABS	$2.00	$6.98	$469,500
	APG-Neuros	$2.90	$8.29	$557,000
	APG-Neuros	$3.71	$9.43	$633,500
2	APG-Neuros	$2.87	$8.26	$555,100
	Siemens	$3.33	$9.08	$610,500
3	Sulzer-ABS (+ Multi-Stage Blower)	$1.80	$7.33	$492,900
	APG-Neuros (+Multi-Stage Blower)	$2.06	$7.70	$517,500
Existing	Turblex (1500 hp)	---	$11.31	$760,000

Alternative	Manufacturer	Cost Ranking			Average Ranking
		Capital Cost	O&M Cost	Total Annualized Cost	
1	Sulzer-ABS	2	1	1	1.33
	APG-Neuros	5	5	5	5.00
	APG-Neuros	7	7	7	7.00
2	APG-Neuros	4	4	4	4.00
	Siemens	6	6	6	6.00
3	Sulzer-ABS (+ Multi-Stage Blower)	1	2	2	1.67
	APG-Neuros (+Multi-Stage Blower)	3	3	3	3.00

DAYTON

One Water

Project Summary and Costs

- NTP issued to Danis on July 14, 2014
- Blowers came online January of 2016
- Completion of project on August 26, 2016
- Total Construction Cost of **$2,768,757**

DAYTON

Jim Pelton
Pelton Environmental

Selected Technology – Magnetic Bearing Turbo Blowers

1. 1992 - Technology developement and proto-types for micro-turbine, micro-generator, high pressure pump, compressor, vacuum pump.
2. First compressor delivered to Joutseno, Finland in 1996.
3. First US Installation 2004 (6) 322 HP Units In Wisconsin.
   – Ohio Installations include Akron, Dayton, Delaware, Logan County. Youngstown is under construction.

Idea Behind the Magnetic Bearing Technology

1. The rotor levitates on magnets.
   - No mechanical contact
   - No wearing parts, even during start/stop.
2. The UPS battery backup supplies power to the magnets in case supply voltage is lost.
3. Airflow controlled by the VFD.
   - Min airflow a function of site conditions and unit selection

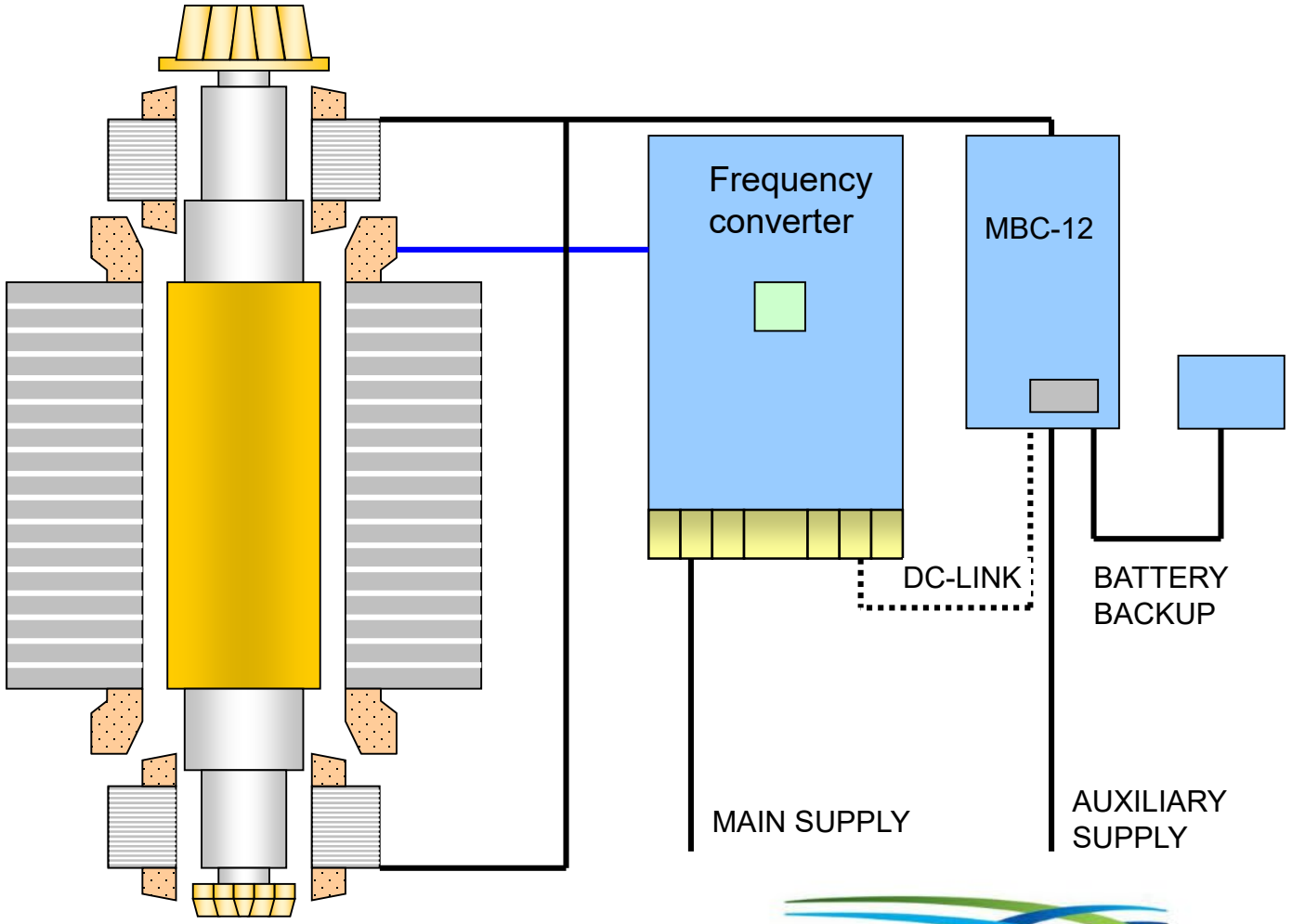

Active Magnetic Bearing Technology - AMB

1. ”Active” indicates that the magnetic fields are produced using electromagnets and their currents are actively controlled by servo loops (position sensors).
2. Additional advantages are lubricant free operation and freedom of maintenance
3. To avoid the need of maintenance, the AMB system has thorough self-monitoring of the unit.
4. Magnetic bearings work in either horizontal or vertical orientation.

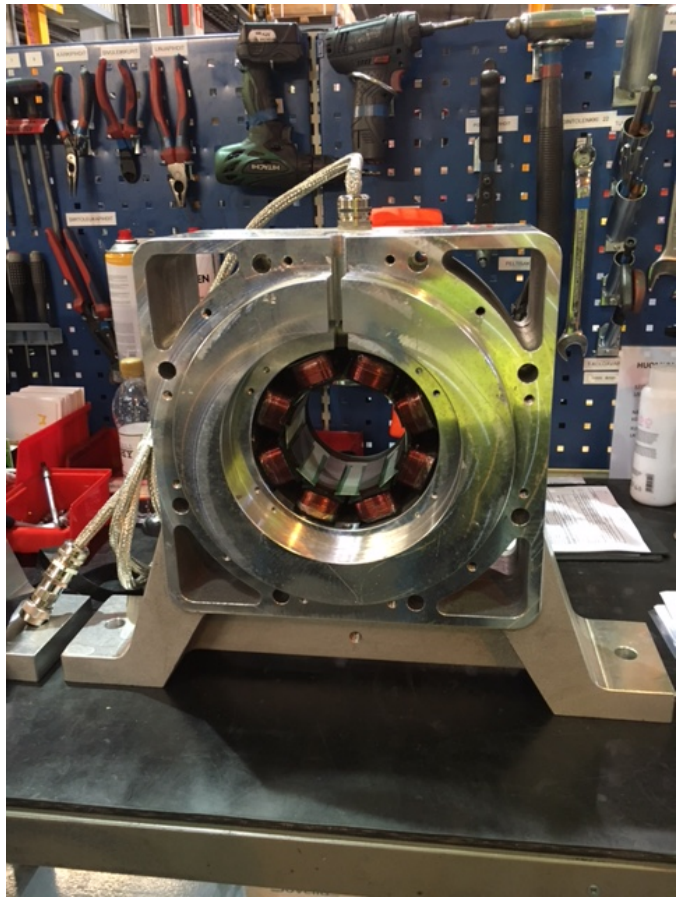

AMB Simplified Operation

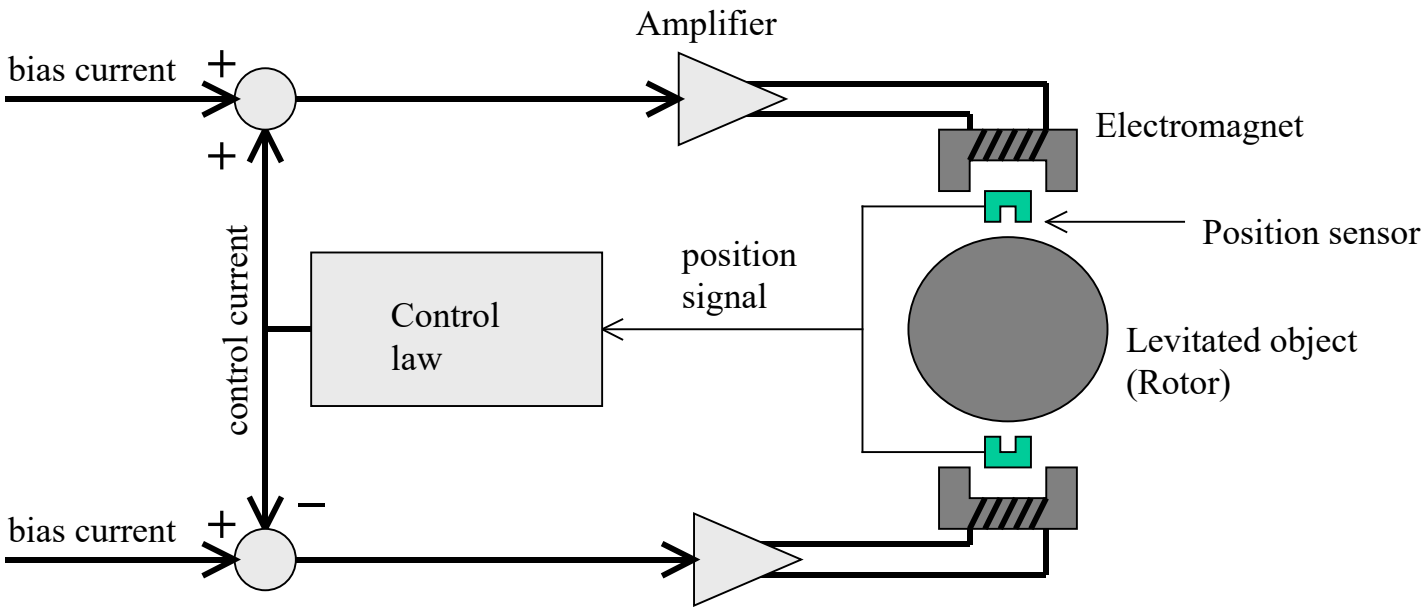

AMB System Components

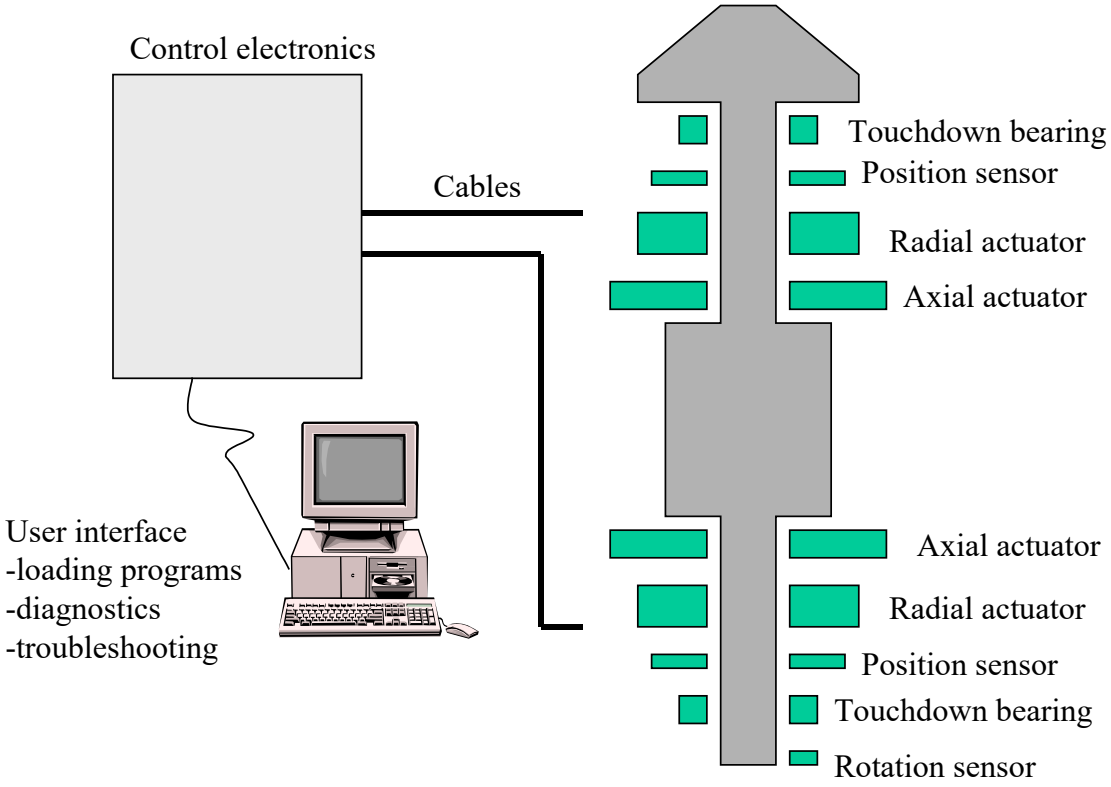

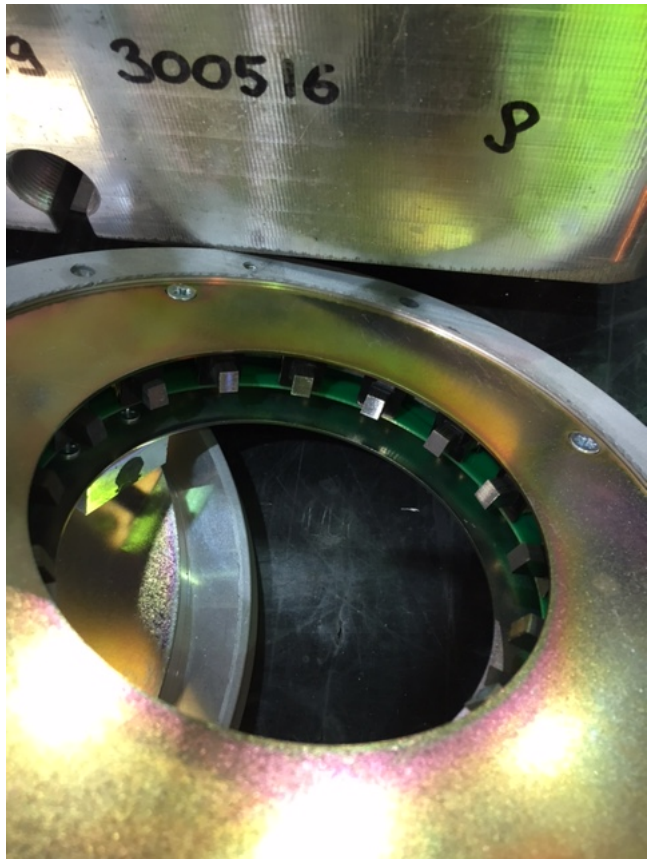

High Speed Permanent Magnet Motor

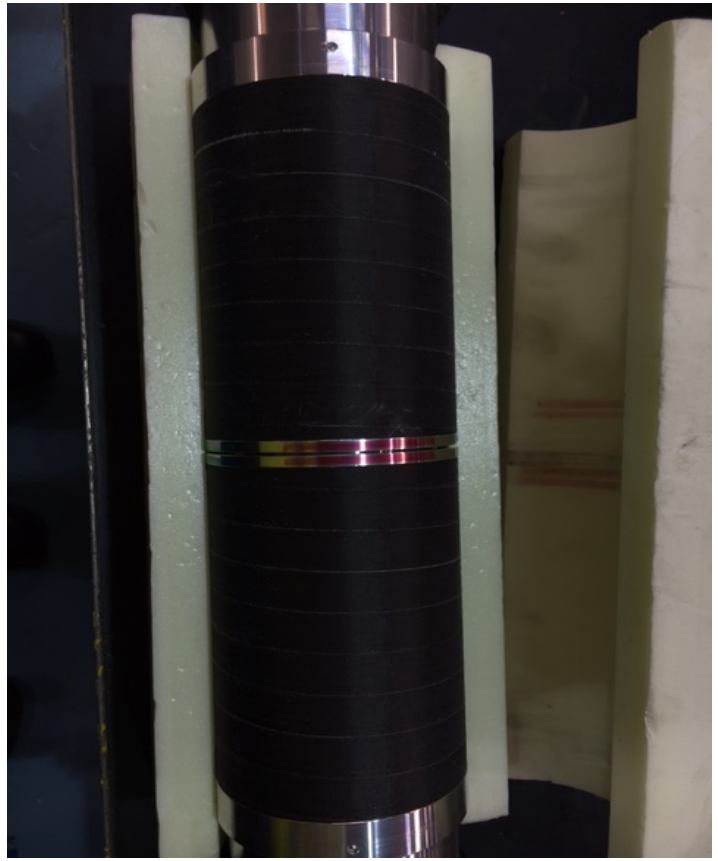

Impeller, Safety Bearings, and Cooling Fan

Sulzer Compressor Family

1. Compressors with induction motors
   - HST 2500: 92-134 HP / 450-2700 SCFM
   - HST 6000: 200-322 HP / 1500 -5000 SCFM
2. Compressors with permanent magnet motors
   - HST 20: 150-250 HP / 1300-4400 SCFM
   - HST 9500: 268-375 HP / 1400-6600 SCFM
   - HST 40: 402-536 HP / 3000-10400 SCFM

Phil Bennington, P.E.
City of Dayton WRF, Process Coordinator

DAYTON

Consultant Initial Comparisons

Alternative	Manufacturer	Minimum Capacity	Horsepower per Blower	Average Power Demand (KW)	Annual Electrical Demand (kW-hr/yr)
Existing	Siemens	20,000 scfm	1,500	949	8,313,000
1	Sulzer-ABS	14,000 scfm	400	418	3,665,000
	APG-Neuros		400	452	3,960,000
	APG-Neuros		500	471	4,126,000
2	APG-Neuros		600	458	4,009,000
	Siemens		550	477	4,181,000
3	Sulzer-ABS (+ Multi-Stage Blower)		268 (+ 600)	472	4,132,000
	APG-Neuros (+Multi-Stage Blower)		250 (+ 600)	476	4,168,000

DAYTON

Defendability

Are you sure? Show me?

DAYTON

Project Results

Projected Payback

Current Blower was at over 8,313,000 KW Annually at approx. 20,000 CFM.

New 3 blowers (70%) Total 5,098,320 KW Annually at approx. 17,500 CFM (Actual 8/01/2018)

Annual Savings 3,214,680 KW reduction (38.7%) @ $0.047 /KWH gives $151,090. Annually

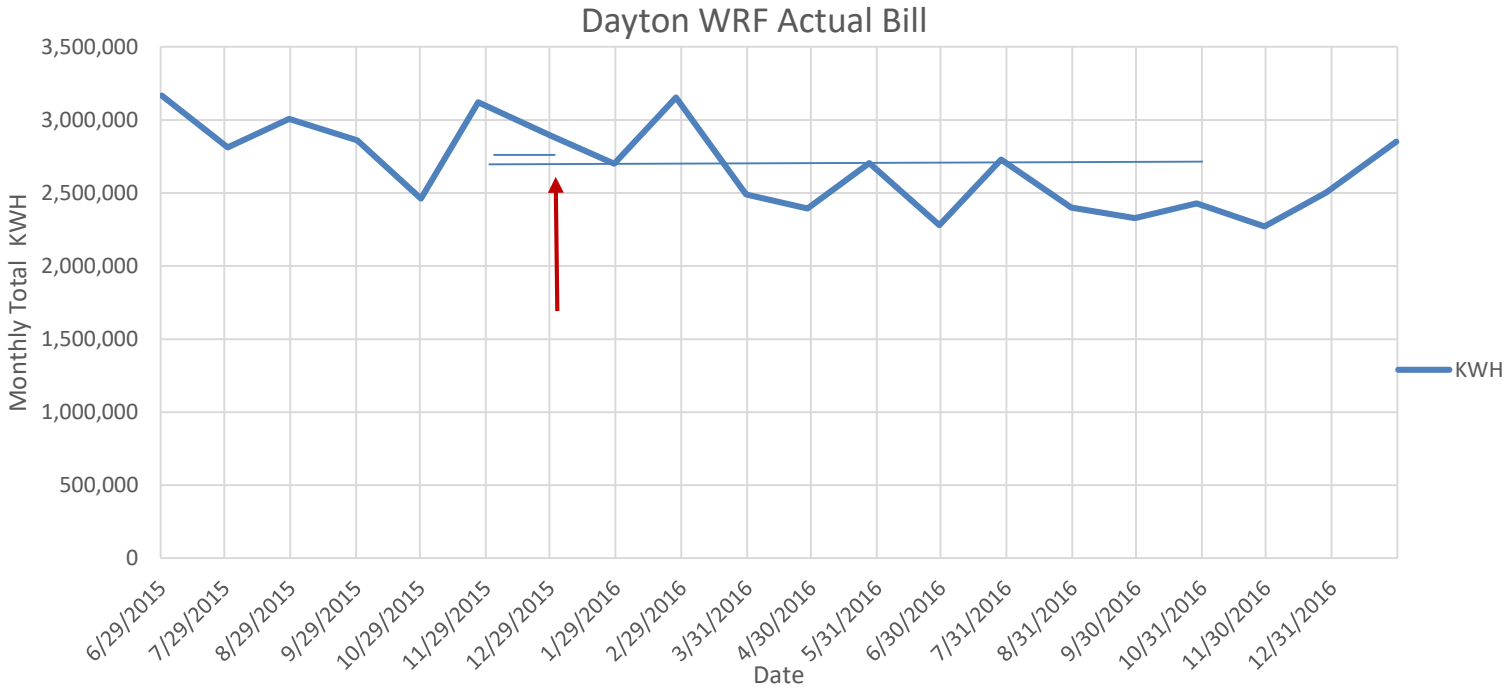

DAYTON

2 Years Before & 2 Years After

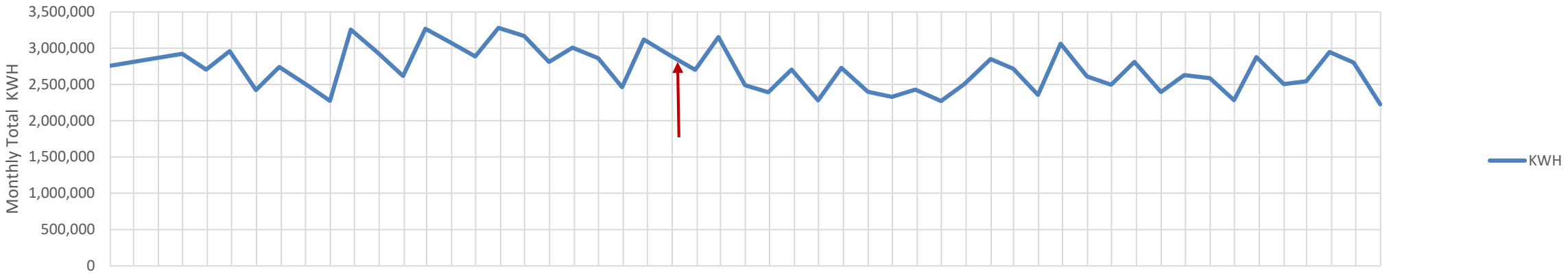

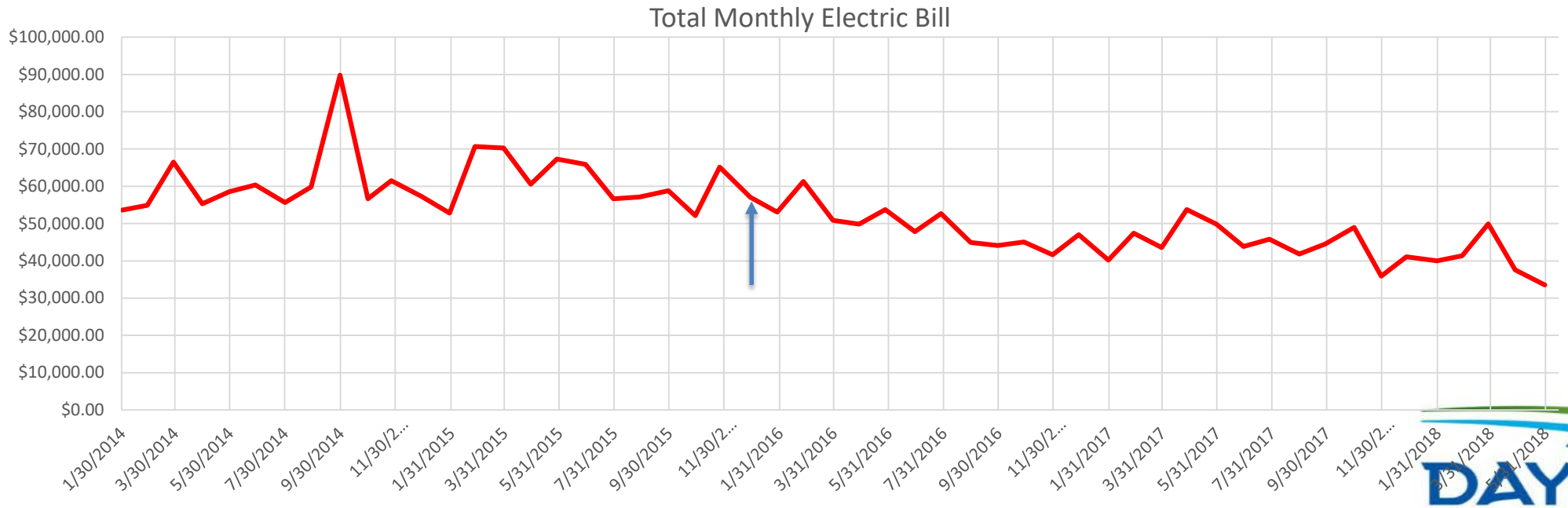

Where is the energy savings?

1. Energy savings should be generated from:
   a) Reducing air requirements (20,000 SCFM down to 14,000 SCFM)
   b) Lower energy consumption due to higher efficiency blowers
2. Calculated savings based on KW readings is $9,400/month

DAYTON

Outside Factors Obscuring the Results

1. Unable to reduce air flow to 14,000 SCFM due to process control (currently 18,000 SCFM)
2. Final Clarifier Project immediately followed forcing air flow to aeration tanks with no automation or air flow metering
3. Electrical KWH of Blowers was embedded within the Monthly Electric Bill. Savings not obvious since not separately recorded. (Could have been better tracked with proper monitoring)
4. City of Dayton started purchasing energy in bulk

DAYTON

Excellent consulting, excellent product, but how do you defend it?

1. Foresight for future data needs to be able to defend the project.

2. SCADA Integration, Substation Monitoring and Process Automation.

3. Historical and Post Construction data.

DAYTON

?? Questions ??

Nick Dailey, nick.dailey@daytonohio.gov

Jim Pelton, jimpelton@peltonenv.com

Phil Bennington, phil.bennington@daytonohio.gov

DAYTON